	Scotch Student ID #			
Circle the relevant digits	0	0	0	0
	1	1	1	1
	2	2	2	2
	3	3	3	3
	4	4	4	4
	5	5	5	5
	6	6	6	6
	7	7	7	7
	8	8	8	8
	9	9	9	9

Teacher's Name

Scotch College

CHEMISTRY

SAC 2 – Rates, Equilibrium and Electrolysis

Date: May 23, 2019

Reading Time	5 minutes
Writing Time	55 minutes

Task Sections	Marks	Your Marks
Total Marks	55	

General Instructions

- Write your student number in the space provided above on this page.
- Please complete all questions in the spaces provided.

Allowed Materials

- A VCAA Chemistry Data Book has been provided.
- Students are permitted to bring into the SAC: pens, pencils, highlighters, erasers, sharpeners, rulers and one scientific calculator.

At the end of the task…

- Please ensure your student number has been filled in at the top of the page and that you have written your teacher's name.
- You may keep the data book.

Electronic Devices

Students are **not** allowed to have a mobile phone, smart watch and/or any other unauthorised electronic device in the SAC, unless it is TURNED OFF and is placed on the front teacher desk.

Q1. 8 marks

More sulfuric acid is produced than any other chemical, with approximately 250 million tonnes manufactured annually. Production is normally achieved using the contact process in the reactor depicted below. In the reactor, molten sulfur is sprayed into a furnace where it burns to produce sulfur dioxide. The sulfur dioxide gas is then mixed with air and passes across several catalyst beds where it reacts to form sulfur trioxide. The sulfur trioxide is then reacted on to form sulfuric acid.

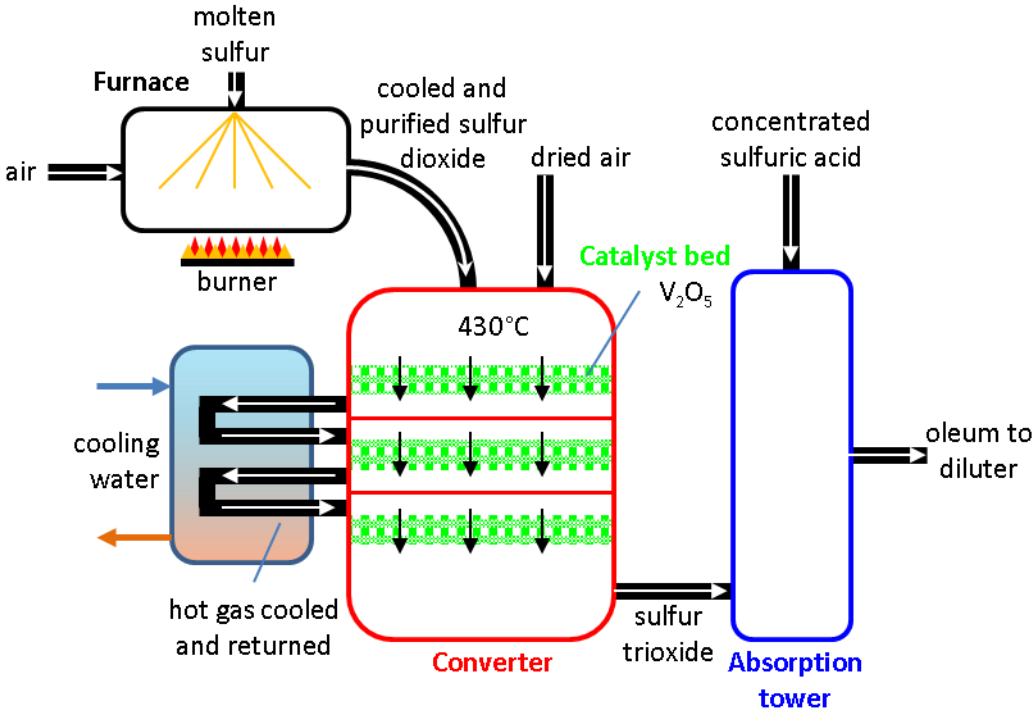

Sulfur dioxide and sulfur trioxide are in equilibrium while in contact with the catalyst beds, as represented by the equation:

$$2SO_2(g) + O_2(g) \rightleftharpoons 2SO_3(g) \qquad \Delta H = -196 \text{ kJ mol}^{-1}$$

a. i. Write an expression for the equilibrium constant for the reaction in the converter.

1 mark

_____

4.0 mol of sulfur dioxide gas and 4.0 mol of oxygen gas are placed in a 2.0 L vessel, which is then sealed and heated. After equilibrium has been reached, analysis of the mixture shows that 3.2 mol of sulfur trioxide is present.

ii. Calculate the amount, in mol, of each species present at equilibrium.

1 mark

_____

_____

_____

iii. Calculate the value of the equilibrium constant for the reaction under these conditions.

2 marks

_____

_____

_____

Q1 continued

b. The graph below shows how the concentration of reactants and products in the converter reaction change over time after sulfur dioxide gas and oxygen gas are introduced into a reaction vessel.

$2SO_2(g) + O_2(g) \rightleftharpoons 2SO_3(g)$ $\Delta H = -196$ kJ mol^{-1}

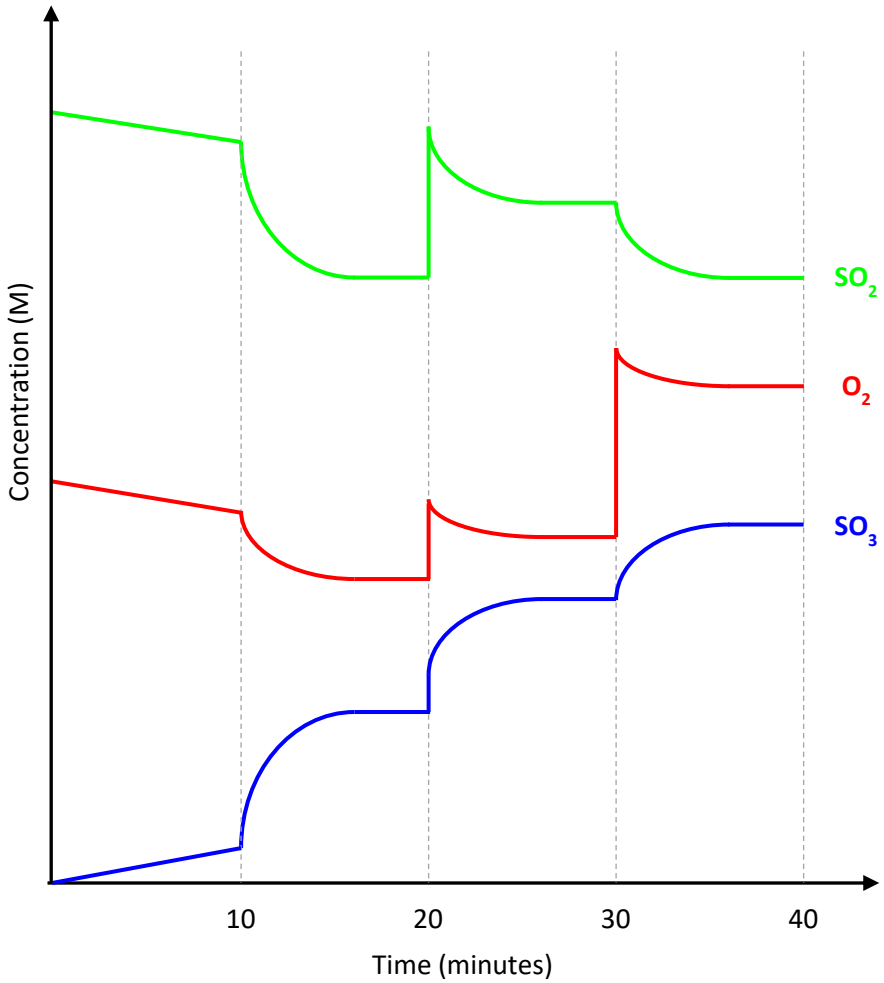

i. State why the concentration of reactants and products do not change between 15 and 20 minutes.

1 mark

_____

_____

ii. Suggest what change was made to the reaction mixture at the following times:

3 marks

10 minutes: _____

20 minutes: _____

30 minutes: _____

Q2. 5 marks
Catalytic converters are now used in most cars to convert some components of exhaust gases into less environmentally damaging molecules. One of these reactions converts carbon monoxide (CO) and nitrogen monoxide (NO) into carbon dioxide (CO_2) and nitrogen. The catalyst usually consists of metals such as platinum or rhodium.

a. Write an equation for this reaction.

1 mark

_____

b. State why it is important to reduce the concentrations of carbon monoxide released into the atmosphere.

1 marks

_____

c. Explain why the converter often consists of small beads coated with the catalyst rather than a solid smooth block of catalyst.

1 mark

_____

_____

_____

d. Use collision theory to suggest why the converter usually does not work to its full potential until the car engine has warmed up.

2 marks

_____

_____

_____

_____

Q3. 6 marks
Potassium metal, K, was discovered in 1807 in England by Sir Humphry Davy. Small, shiny balls of molten potassium were produced when an electric current from an early battery was passed through molten potassium hydroxide, KOH.

The electrolytic cell is shown in the diagram to the right.

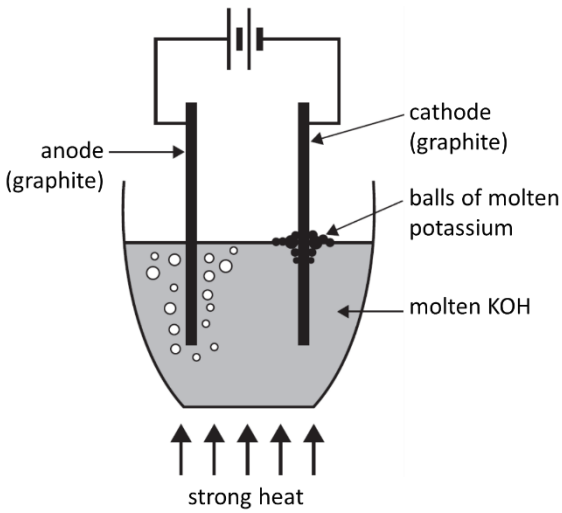

a. i. Write the half equation for the production of potassium at the cathode.

1 mark

_____

Q3 continued

ii. What current was flowing through the cell if 0.152 g of molten potassium was produced in the first minute?

3 marks

b. If Davy had electrolysed an aqueous solution of 1.0 M KOH at 25 °C, instead of molten KOH, what products would be **observed** at the anode and cathode?

2 marks

Electrode	Product(s)
Anode	
Cathode	

Q4. 4 marks

A researcher conducted an experiment to determine the charge of gold ions in a gold salt using electrolysis. She passed a current of 2.00 A through the solution for 6.75 minutes.

a. Use the current and time to calculate the quantity of electric charge, Q, passed through the cell.

1 mark

b. Use your answer to part a. to calculate the number of mole of electrons passing through the cell during the electrolysis.

1 mark

c. If 0.551 g of gold was deposited during the electrolysis, determine the charge on the gold ions used in this experiment.

2 marks

Q5. 6 marks

A group of St Kevin's students conducted an experiment to find the mass of copper deposited on the cathode when different amounts of electric charge were passed through an acidified aqueous solution of copper(II) sulfate. The class results are presented in the graph below.

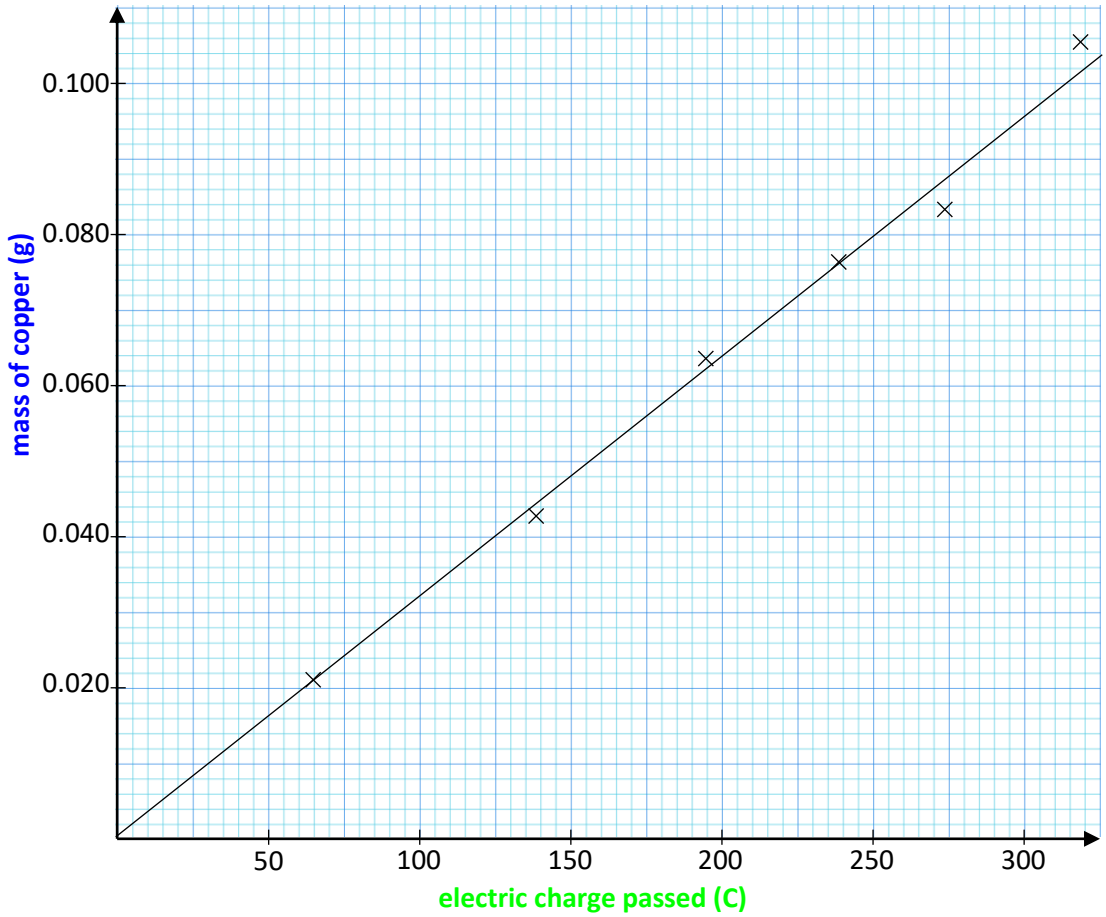

a. Use the graph of the class data to find the quantity of electric charge, in coulombs, required to deposit 0.048 g of copper metal at the cathode of this electrolysis cell. (*Show how you obtained your answer by ruling lines on the graph*).

2 marks

_____

_____

b. Use your answer to part a. to calculate the quantity of charge, in coulombs, needed to deposit 1.0 mol of copper at the cathode based on the experimental data. (M(Cu) = 63.5 g mol^{-1})

2 marks

_____

_____

_____

Q5 continued

c. Use your answer to part b. to determine an experimental value for the Faraday constant.

1 mark

_____

_____

_____

d. Suggest one experimental limitation that could account for the difference observed between the experimental value for the Faraday constant and the literature value.

1 mark

_____

_____

Q6. 5 marks

A student investigated the electroplating of a metal key with nickel for his extended practical investigation. He connected the key and a graphite electrode to a power supply and submerged the electrodes into a tank containing an aqueous solution of nickel(II) iodide (NiI_2) before turning the power on. A diagram of his apparatus is shown below.

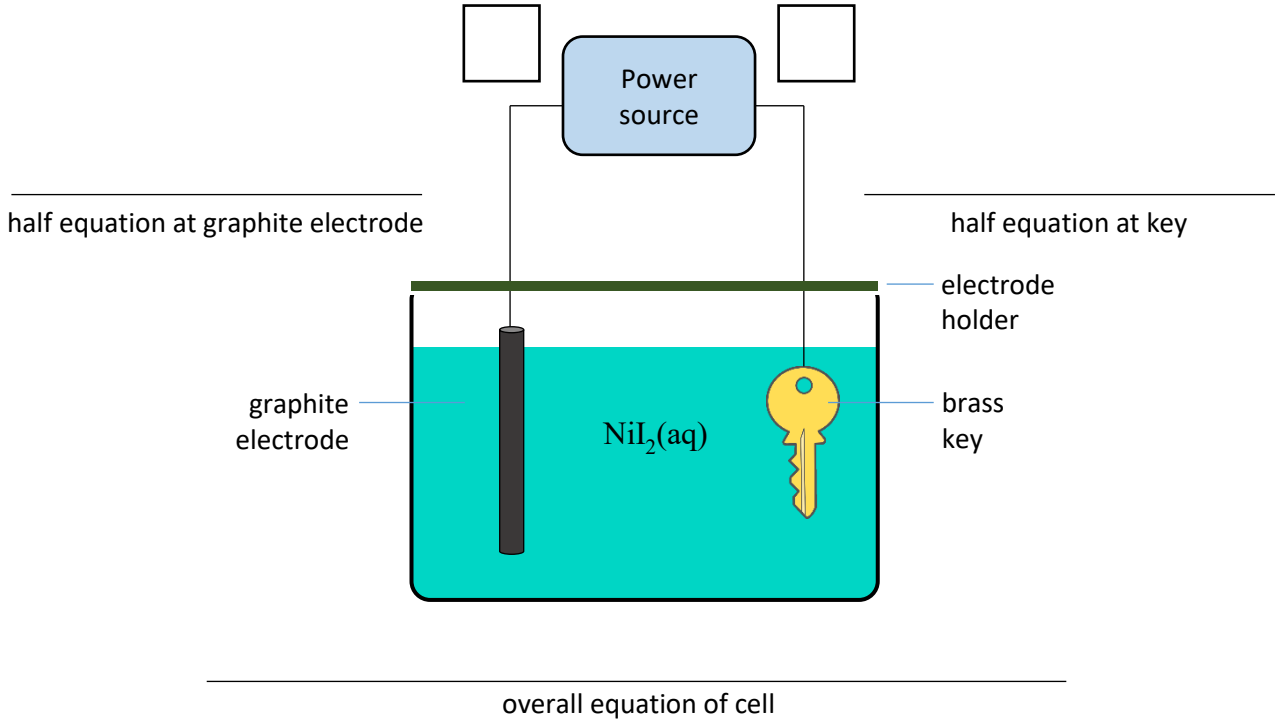

a. Use arrows to show the direction of electron flow in the wires between the power supply and the electrodes.

1 mark

b. Place a "**+**" and a "**–**" in the boxes next to the power supply to show the power supply polarity.

1 mark

c. Write the half equation for the reaction at each electrode.

2 marks

d. Write the overall equation for the cell.

1 mark

Q7. 12 marks

A manufacturer in Geelong produces ammonia in a reactor at 430 °C and 200 kPa according the equation:

$$N_2\,(g) + 3H_2\,(g) \overset{\text{Fe catalyst}}{\rightleftharpoons} 2NH_3\,(g) \quad \Delta H = -92\ \text{kJmol}^{-1}$$

a. Complete the table below by indicating the effects of the proposed changes.

6 marks

	Equilibrium yield of NH_3 *increase*, *decrease*, *unchanged*	Equilibrium constant, K_c *increase*, *decrease*, *unchanged*	Rate of reaction *increase*, *decrease*, *unchanged*
Temperature increased to 550°C			
Pressure increased to 500 kPa			

ii. State the effect that the iron catalyst has on the position of equilibrium of the reaction.

1 mark

_____

_____

iii. State and explain the effect that the catalyst has on the rate of the reaction.

3 marks

_____

_____

_____

_____

_____

_____

iv. The equilibrium yield of ammonia is improved by using an excess of the cheaper reactant, nitrogen. Use Le Chatelier's principle to explain how excess nitrogen improves equilibrium yield.

2 marks

_____

_____

_____

_____

_____

Q8. 4 marks
The reaction between calcium carbonate and excess hydrochloric acid is carried out in an open flask. Measurements are made to determine the rate of the reaction.

$$CaCO_3(s) + 2HCl(aq) \rightarrow CaCl_2(aq) + H_2O(l) + CO_2(g)$$

a. Suggest two different types of data that could be collected to measure the rate of this reaction.

2 marks

1. _____

2. _____

b. The temperature of the reaction was kept constant throughout the reaction. Explain how you would expect the rate of the reaction to change with time and why.

2 marks

_____

_____

_____

_____

Q9. 5 marks
Three different aqueous solutions are prepared containing the ions Ag^+, Pb^{2+} and Cr^{3+} respectively and then deposited via electrolysis. Many laboratories do not stock chromium(III) compounds, but can produce them by the reduction of chromium(VI) compounds by acidic glucose solutions.

a. Write a half equation for the production of chromium(III) ions by the reduction of chromate(VI) ions ($Cr_2O_7^{2-}$) in acidic conditions.

2 marks

_____

Sample	Amount of metal deposited (mol)	Charge (C)
A	0.691	200,045
B	1.262	60,892
C	0.836	322,696
D	1.395	134,618
E	0.523	100,939

b. Identify the sample labels from the table above that would correspond with each of the metals below.

3 marks

Ag deposited ☐

Pb deposited ☐

Cr deposited ☐

End of SAC